INSTALLATION INSTRUCTIONS

for Top Mount Pull-Out Waste Containers

REV-A-SHELF® Wood Classics™

For models: 4WCTM-12DM1, 4WCTM-15DM2, 4WCTM-18DM2 and 4WCTM-27-4

Step 1:
Install rear bracket to rear of slide.

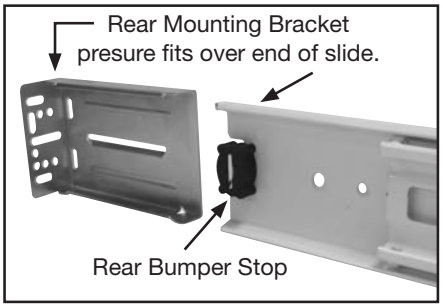

Step 2:
Install front of slide to face frame. Hole is placed 3/8" from front of cabinet. Bottom of slide should be 14 1/4" from cabinet floor. Use #6 x 1/2" Low Profile Truss Head Screw

Step 3:
If rear of cabinet is thinner then 1/2", install a 1/2" x 3" wide furring strip to the back of the cabinet cenered 14 1/4" from floor of cabinet.

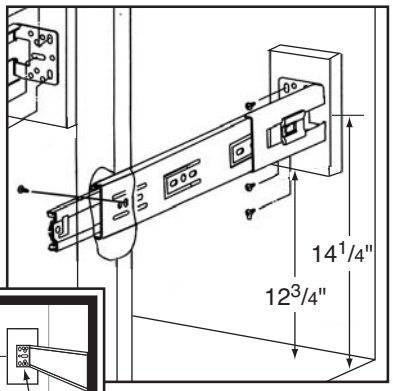

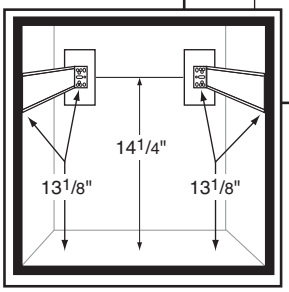

Step 4:
Measure from inside cabinet wall to inside face frame (A) distance should be measured the same at rear of cabinet (B).

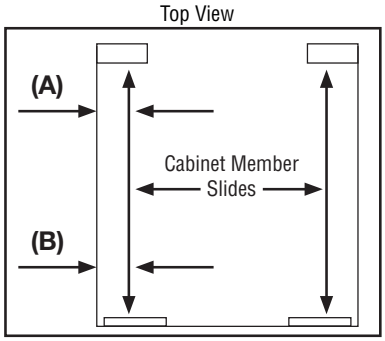

Step 5:
Mount Rear Bracket.
Extend the slide rear mounting bracket until it contacts the rear (Furring Strip). Bottom of slide should be 13 1/8" from cabinet floor . Rear mounting bracket should be the same distance from the side cabinet wall at rear of slide as it is up front. Drive mounting screw in center horizontal slot of rear mounting bracket, tighten. Tighten screw in front bracket.

Step 6:
Install wood unit (with slides attached) into cabinet, engaging product member slides into cabinet member slides, push unit until it locks in place.

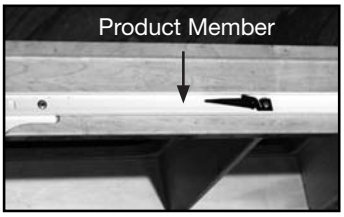

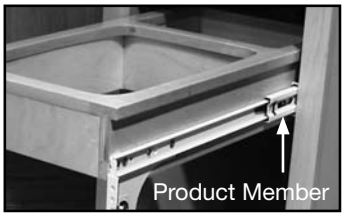

INSTALLATION INSTRUCTIONS

for Top Mount Pull-Out Waste Containers

REV-A-SHELF® Wood Classics™

For Models: 4WCTM-1550DM-1 and 4WCTM-2150DM-2

Step 1:
Install rear bracket to rear of slide.

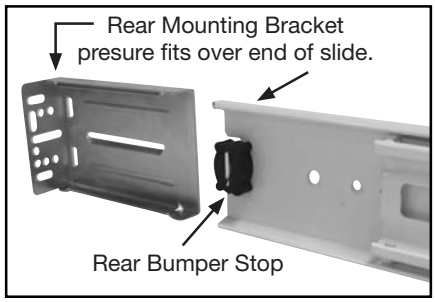

Step 2:
Install front of slide to face frame. Hole is placed 3/8" from front of cabinet. Bottom of slide should be 19" from cabinet floor. Use #6 x 1/2" Low Profile Truss Head Screw

Step 3:
If rear of cabinet is thinner then 1/2", install a 1/2" x 3" wide furring strip to the back of the cabinet cenered 20 1/8" from floor of cabinet.

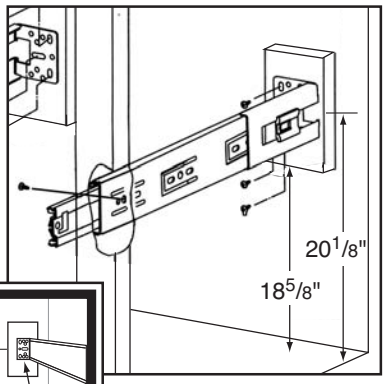

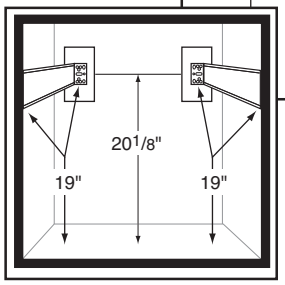

Step 4:
Measure from inside cabinet wall to inside face frame (A) distance should be measured the same at rear of cabinet (B).

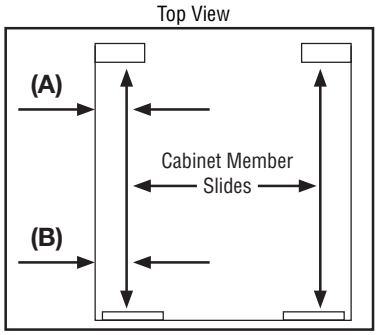

Step 5:
Mount Rear Bracket.
Extend the slide rear mounting bracket until it contacts the rear (Furring Strip). Bottom of slide should be 19" from cabinet floor . Rear mounting bracket should be the same distance from the side cabinet wall at rear of slide as it is up front. Drive mounting screw in center horizontal slot of rear mounting bracket, tighten. Tighten screw in front bracket.

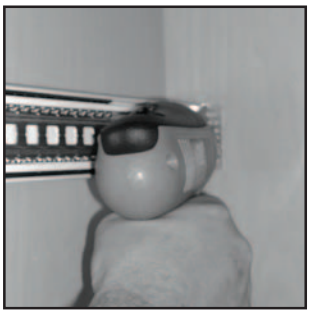

Step 6:
Install wood unit (with slides attached) into cabinet, engaging product member slides into cabinet member slides, push unit until it locks in place.

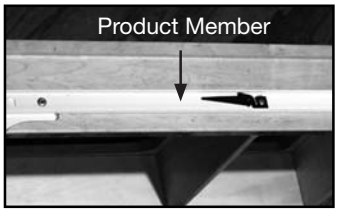

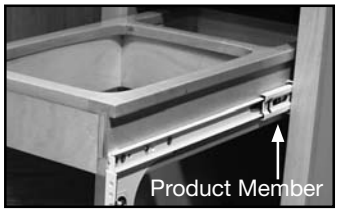

Step 7:
Mount Door…See seperate instruction sheet included.

INSTALLATION INSTRUCTIONS

For Top Mount Waste Container Door Mounting Brackets

illustration 1

STEP 1:

Measure outside to outside dimension of Door Brackets.
Note as Dimension C.

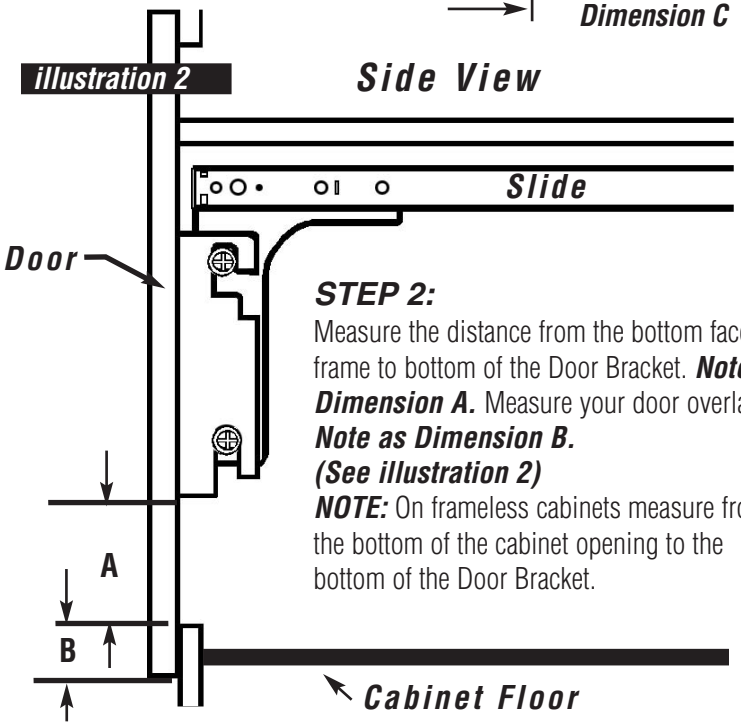

illustration 2

STEP 2:

Measure the distance from the bottom face frame to bottom of the Door Bracket. ***Note as Dimension A.*** Measure your door overlap. ***Note as Dimension B.***
(See illustration 2)
NOTE: On frameless cabinets measure from the bottom of the cabinet opening to the bottom of the Door Bracket.

STEP 3:

Add Dimension A and Dimension B together. Measure this distance from bottom of the inside of your cabinet door and mark a horizontal line. ***(See illustration 3).*** Measure center point on inside of cabinet door and mark this point as well.

STEP 4:

Take Dimension C (from Step 1) and divide it by two. Measure this distance to the left of the center point on the inside of the cabinet door and make a vertical line. Measure this distance to the right of the center point on the inside of the cabinet door and make another vertical line
(See illustration 3)

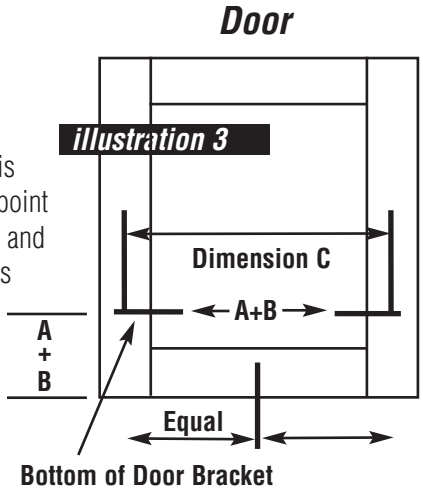

illustration 3

STEP 5:

Remove Door Brackets from product members and screw to inside of cabinet door with #6 x 1/2'' flat head screws.
NOTE: Line up door bracket to cabinet door by aligning door bracket with the vertical and horizontal lines you have marked in Steps 3 & 4.
(See illustration4)

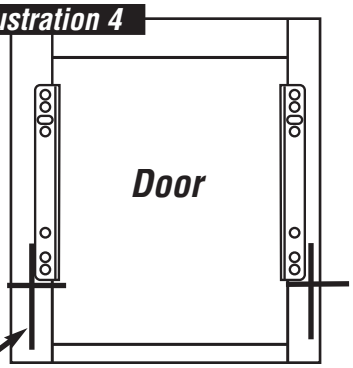

illustration 4

STEP 6:

Hang door with brackets attached on the mounting screws on to the product members. Tighten bottom screws securely. Tighten top screws (with washer) snugly allowing for future adjustment.
(See illustration 5)

illustration 5

STEP 7:

Be sure bumper pads *(not provided)* are installed to all four corners of door. Push door closed and apply pressure to all four corners making sure door is flush with cabinet.
(See illustration 6).

illustration 6

STEP 8:

Pull door open, from sides of door at slide level.
(See illustration 7).
Securely tighten top screws.

illustration 7

STEP 9:

If your cabinet door is not straight (even all around) you can adjust it by loosing the screws on one of the sides, properly align the cabinet door and re-tighten the screws.

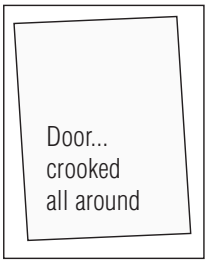

REV-A-SHELF®
2409 Plantside Drive • Jeffersontown, KY 40299
800-626-1126 • 502-491-2215 fax
www.rev-a-shelf.com

ALTERNATIVE **"EASY INSTALL"**

for Top Mount Pull-Out Waste Containers WITH

Door Mounting Brackets Tape

Your Door Mount Kit also includes two pieces of specially designed two-sided tape. Follow the directions below for quick and easy installation method that is usually much faster for "In-Home" retro-fitting:

STEP 1:
Follow steps one through six on "Installation Instructions" (front page).

STEP 2:
Make sure you have correctly selected the correct positioning of our Door Bracket Flanges so that the mounting holes will be located in a position to insert the fastners (screws) in the thick, outside section of the door panel.

STEP 3:
Peel off one side of each of the (2) tape strips provided and carefully place over the door bracket flanges

STEP 4:
Loosen the 4 bolts (2 each side) that connect the door brackets to the product member bracket. Pull them forward (towards you) and tighten them. This will insure that the face of the door bracket extends slightly outside of the front frame of your cabinet.

STEP 5:
Peel off the exterior layer of tape. Now carefully line up your desired door position by eyesight using the drawer above and any cabinets to your left or right as a gauge for correct alignment.

STEP 6:
Press the door firmly onto the door brackets with the two sided tape. Put pressure directly on the sides, in position with the brackets to allow for good adhesion.

STEP 7:
Carefully pull the door out from the sides and mark several holes on each side through the brackets as a reference in case the tape does not hold the bracket to the door.

STEP 8:
Fasten the brackets to the door using the tape as a temporary hold while you insert #6 x 1/2" wood screws.

STEP 9:
- Final adjustment
- Loosen the four bolts and make adjustments if necessary. (See Step 9 on previous page)

REV-A-SHELF® Wood Classics™